PHOTOHEAD

Component Side

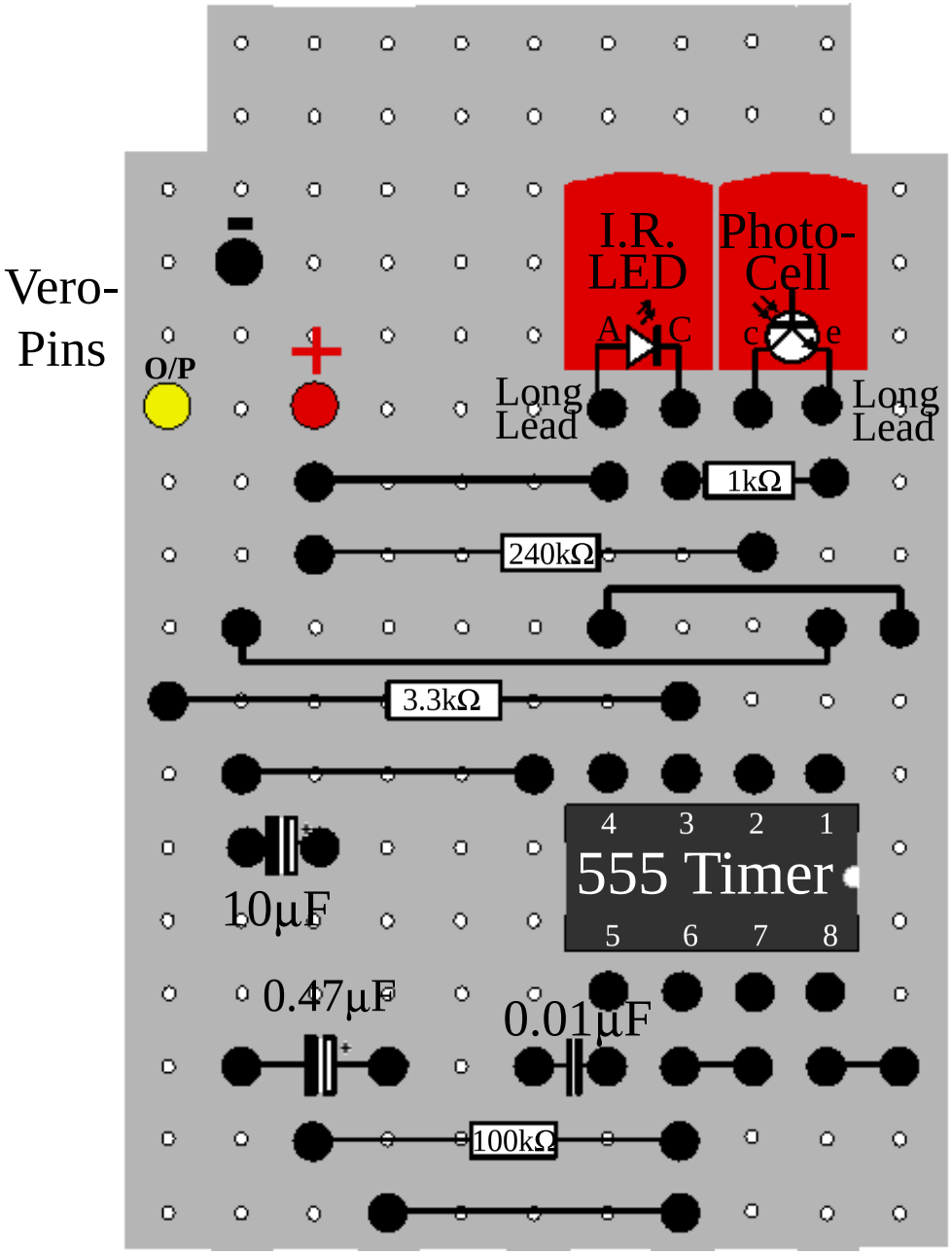
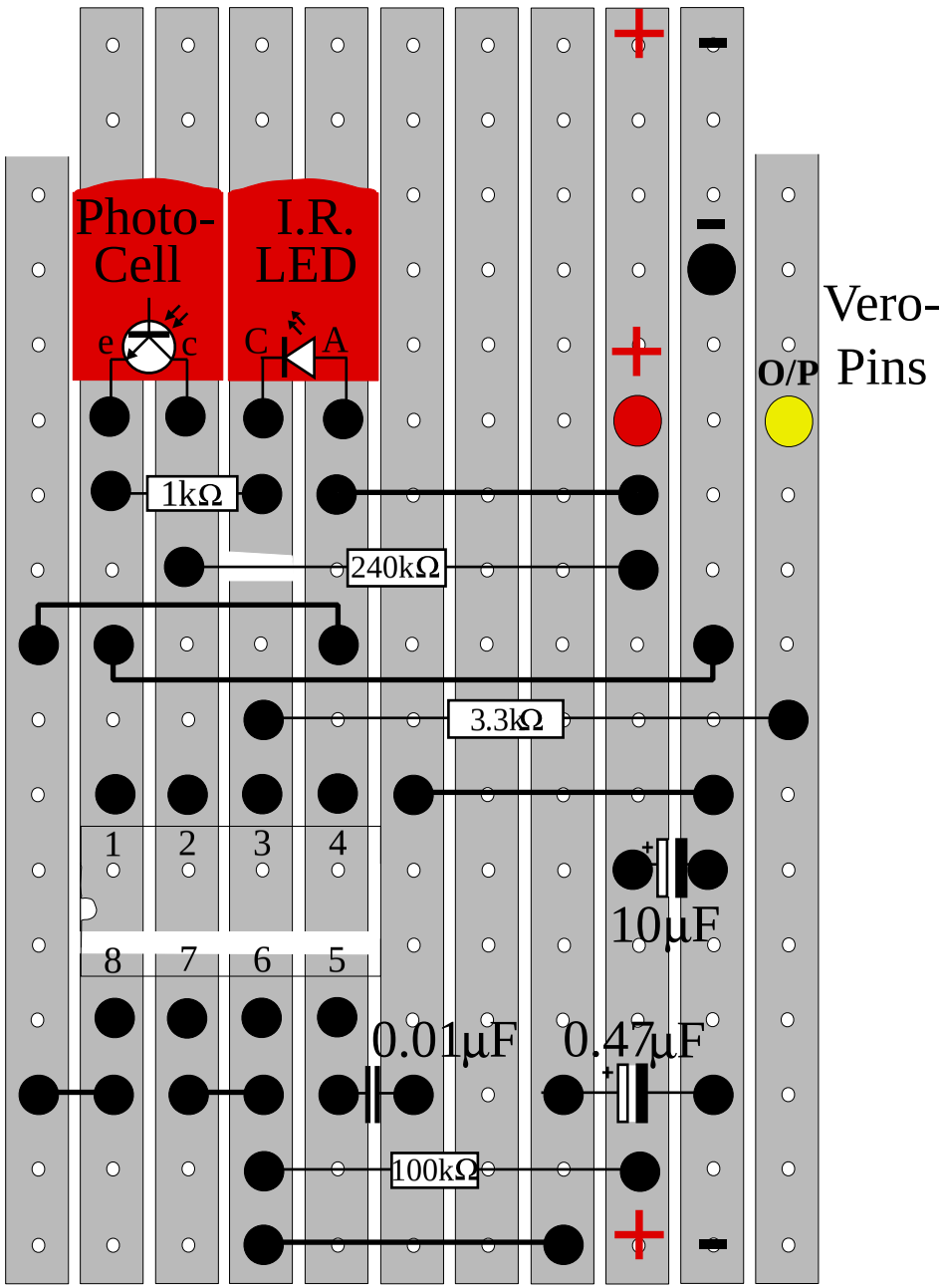
Solder Side